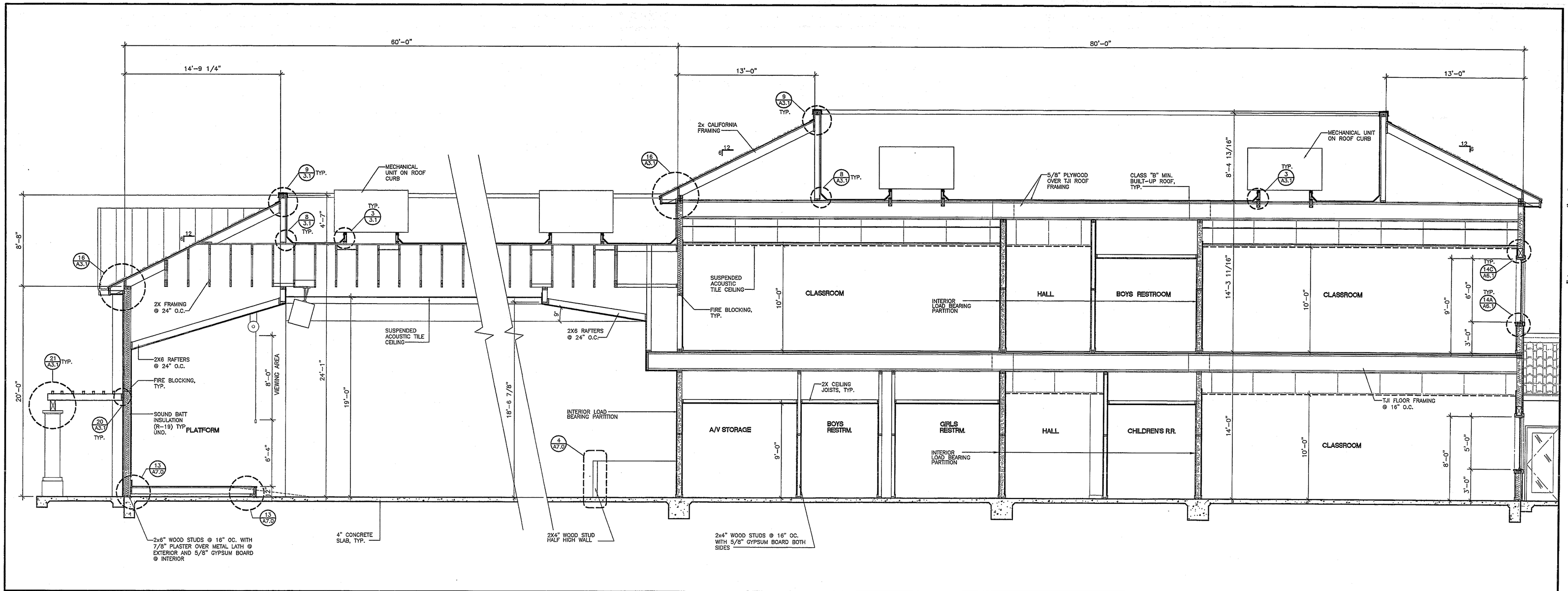

BUILDING SECTION 1/4"=1'-0" 2

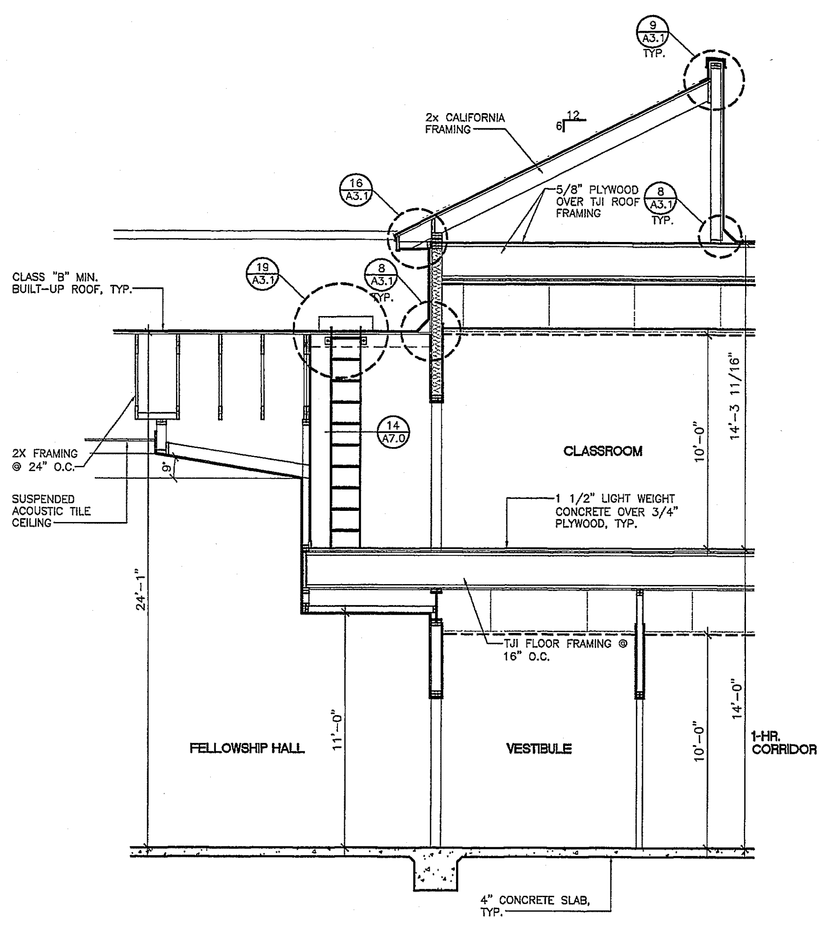

BUILDING SECTION 1/4"=1'-0" 3

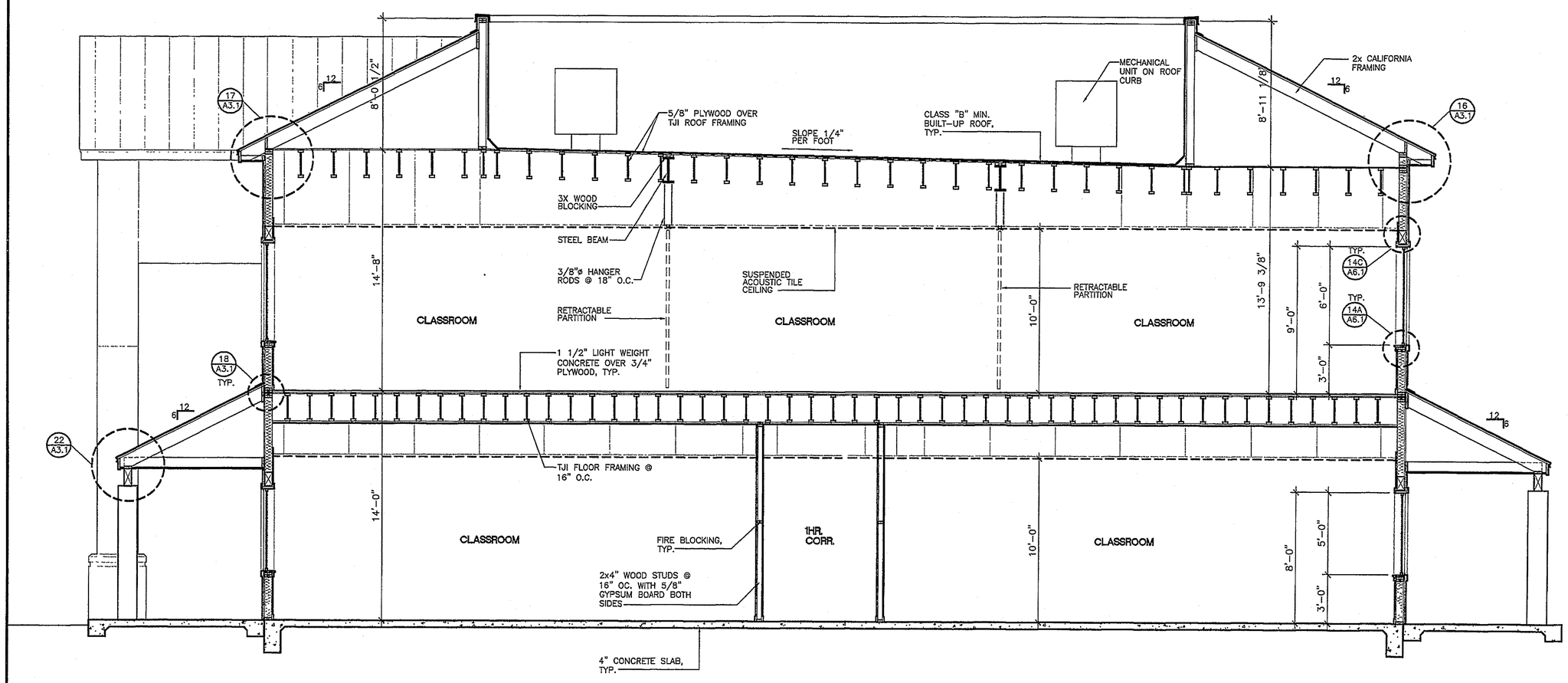

BUILDING SECTION 1/4"=1'-0" 1

TOVEY/ SHULTZ CONSTRUCTION INC.
18261 COLLIER AVE. SUITE "A"
LAKE ELSINORE, CA 92530
PHONE (909)471-5677
FAX (909)471-5547

DESIGN/BUILD

CONSULTANT

Brian R. Bloom Architect
350 S. Milliken Ave., Ste. G, Ontario, CA 91761-7850
(909) 390-7209 FAX: (909) 390-7509

ARCHITECTURE AND PLANNING

LICENSED ARCHITECT BRETT A. STONE NO. C17047 7/31/07 EXP. DATE STATE OF CALIFORNIA

PROJECT

CALVARY CHAPEL OF THE HIGH DESERT
14740 EUCALYPTUS
HESPERIA, CA
92345

PROJECT

FELLOWSHIP HALL

ISSUANCES

OWNERS MEETING	03-08-04
PLANNING REVIEW	06-01-06
PLAN CHECK SUBMITTAL	03/26/07

REVISIONS

WEISER IRON
MAR 30 2007
RECEIVED

TITLE

BUILDING SECTIONS

SCALE 1/4"=1'-0"

DATE 03-26-07

JOB NO. 260106

A4.1