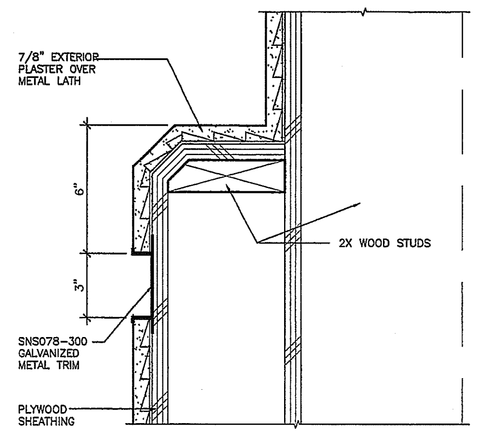

PLASTER SCREED AT COLUMNS | 3"=1'-0" | 18

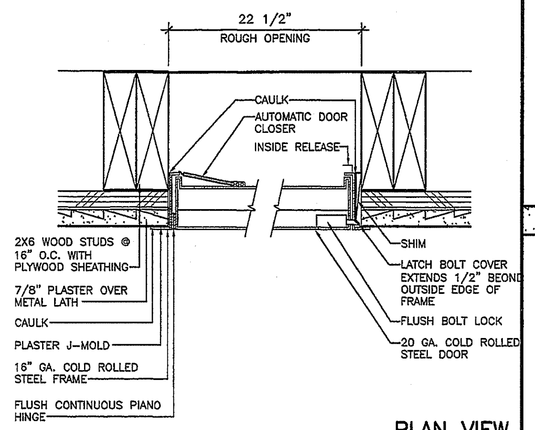

PLAN VIEW

ACCESS PANEL SECTION | 3"=1'-0" | 16

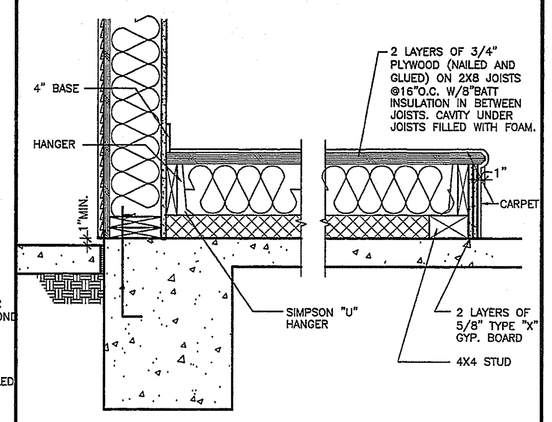

PLATFORM DETAIL | 1"=1'-0" | 13

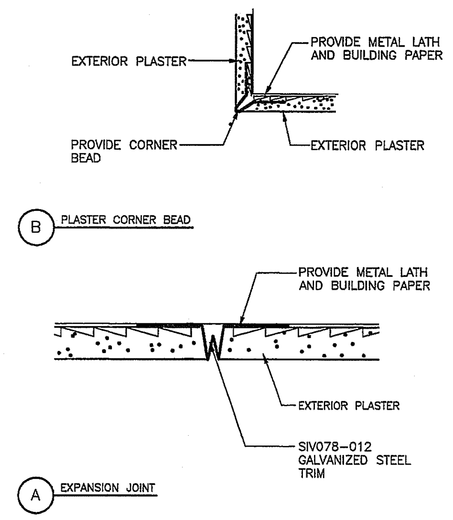

PLASTER CORNER AND JOINTS | 1/8"=1'-0" | 9

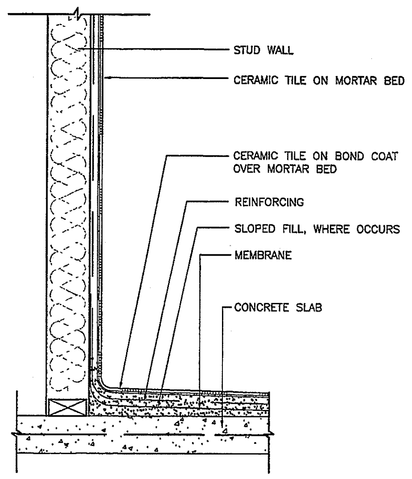

BASE DETAIL | 1 1/2"=1'-0" | 7

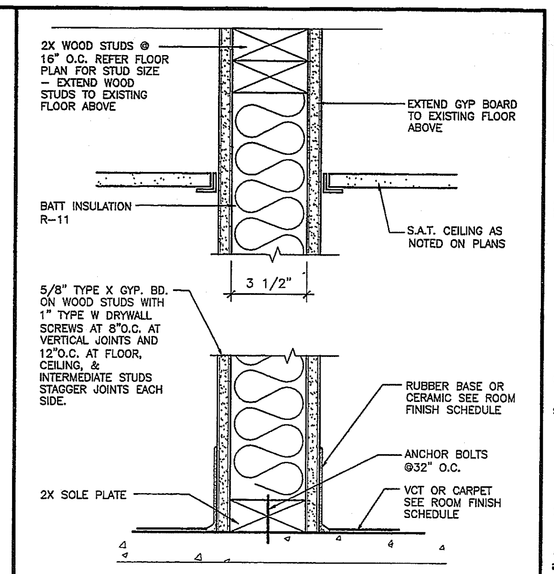

ONE HOUR RATED WALL | 3"=1'-0" | 4

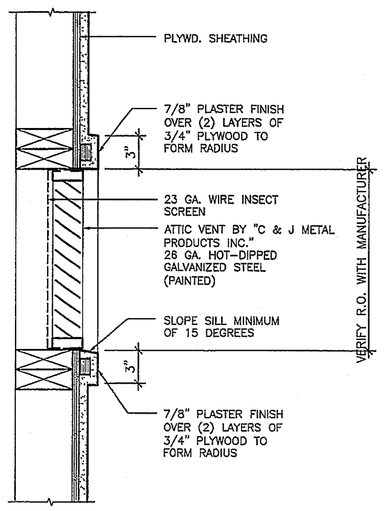

LOUVER SECTION | 1 1/2"=1'-0" | 17

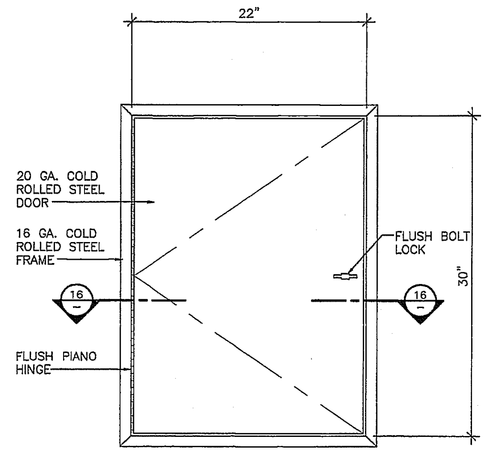

ACCESS PANEL ELEV. | 1 1/2"=1'-0" | 15

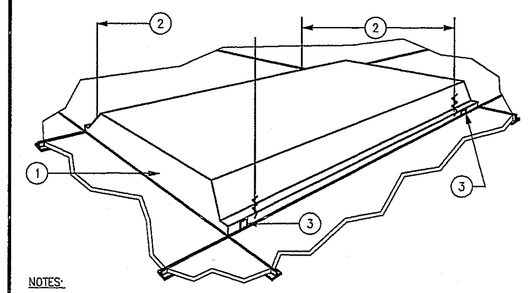

NOTES:

1. RECESSED FLUORSCENT LIGHT FIXTURE IN DEMOUNTABLE CEILING
2. PROVIDE TWO(2) 9 GUAGE STEEL SUPPORT WIRES ON DIAGONAL CORNERS, WITHIN 3 INCHES OF CORNER; OR FOUR(4) 12 GUAGE AT FOUR CORNERS TIED TO BUILDING STRUCTURE INDEPENDANTLY OF CEILING SUPPORTS. ALLOW 1/4" SLACK IN WIRE.
3. PROVIDE FOUR(4) CLIPS ATTACHED TO FIXTURES TO POSITIVELY TIE FIXTURE TO T-BAR CEILING CHANNEL SUSPENSION GRID.

LIGHT FIXTURE BRACING | NONE | 12

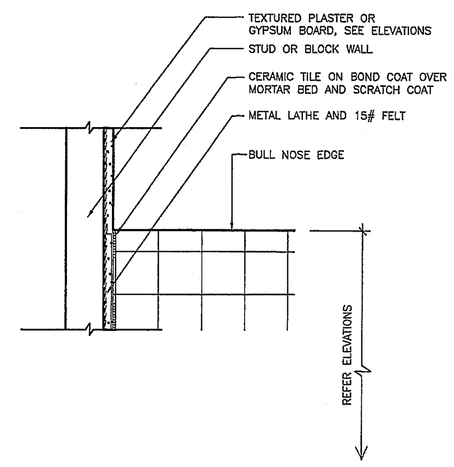

TILE TOP EDGE | 3"=1'-0" | 8

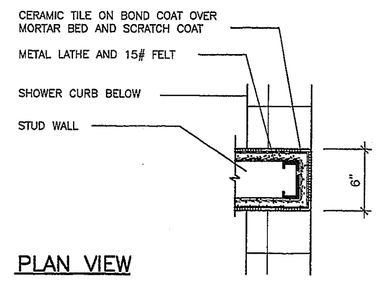

PLAN VIEW

END WALL DETAIL | 1 1/2"=1'-0" | 6

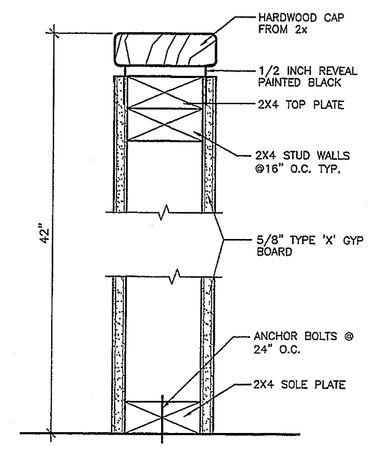

HALF-WALL DETAIL | 3"=1'-0" | 3

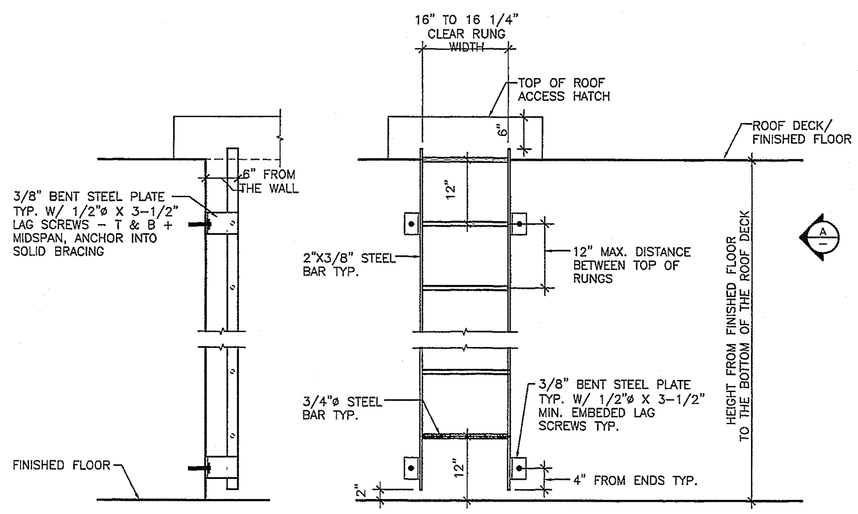

SIDE ELEVATION -A

FRONT ELEVATION

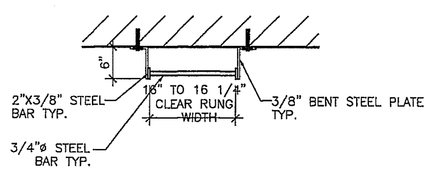

PLAN

NOTE:
ALL RUNGS TO BE SPACED EQUALLY

LADDER DETAIL | 3/4"=1'-0" | 14

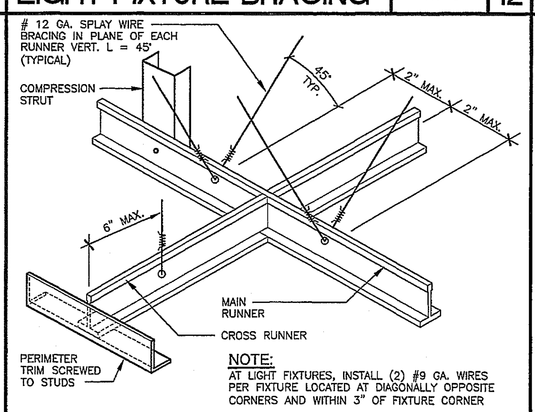

NOTE:
AT LIGHT FIXTURES, INSTALL (2) #9 GA. WIRES PER FIXTURE LOCATED AT DIAGONALLY OPPOSITE CORNERS AND WITHIN 3" OF FIXTURE CORNER

BRACING: WHERE DESIGN CALCULATIONS ARE NOT PROVIDED, HORIZ. RESTRAINT SHALL BE EFFECTED BY (4) # 12 GA. WIRES SECURED TO MAIN RUNNER WITHIN 2" OF THE CROSS RUNNER INTER- SECTION AND SPLAYED 90 DEGREES FROM EACH OTHER AT AN ANGLE NOT EXCEEDING 45° FROM THE PLANE OF THE CEILING. THESE HORIZONTAL RESTRAINT POINTS SHALL BE PLACED 12 FEET O.C. IN BOTH DIRECTIONS WITH THE FIRST POINT 4 FEET FROM EACH WALL. ATTACHMENT OF THE RESTRAINT WIRES TO THE STRUCTURE ABOVE SHALL BE ADEQUATE FOR THE LOAD IMPOSED.

STRUTS: A STRUT FASTENED TO THE MAIN RUNNER SHALL BE EXTENDED TO AND FASTENED TO THE STRUCTURAL MEMBERS OF THE ROOF OR FLOOR ABOVE. THE STRUT SHALL BE ADEQUATE TO RESIST THE VERTICAL COMPONENT INDUCED BY THE BRACING WIRES. STRUTS SHALL BE PLACED 12 FEET O.C. IN BOTH DIRECTIONS WITH THE FIRST POINT WITHIN 6 FEET FROM EACH WALL.

SUSPENDED CEILINGS SHALL BE INSTALLED PER U.B.C., AND/OR APPROPRIATE BLDG. CODE STANDARDS.

T-BAR CEILING | 1/4"=1'-0" | 11

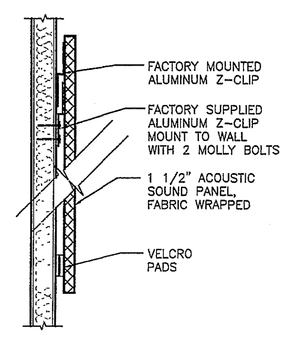

SOUND PANEL DETAIL | 1/2"=1'-0" | 10

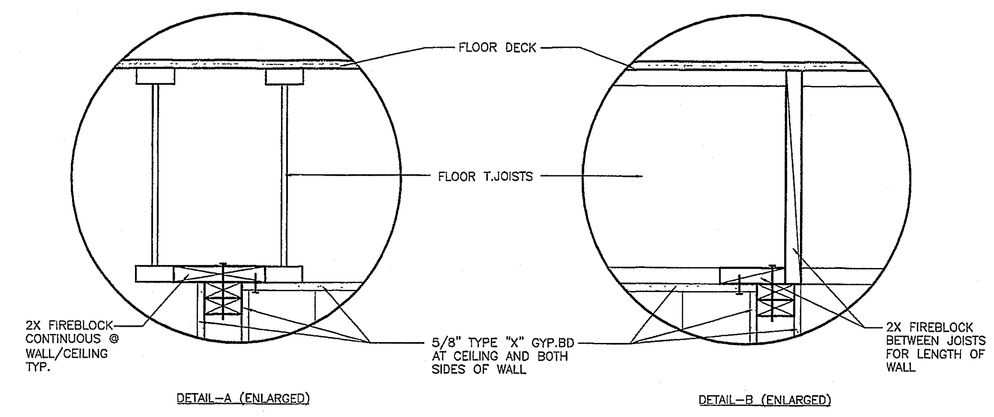

DETAIL-A (ENLARGED)

DETAIL-B (ENLARGED)

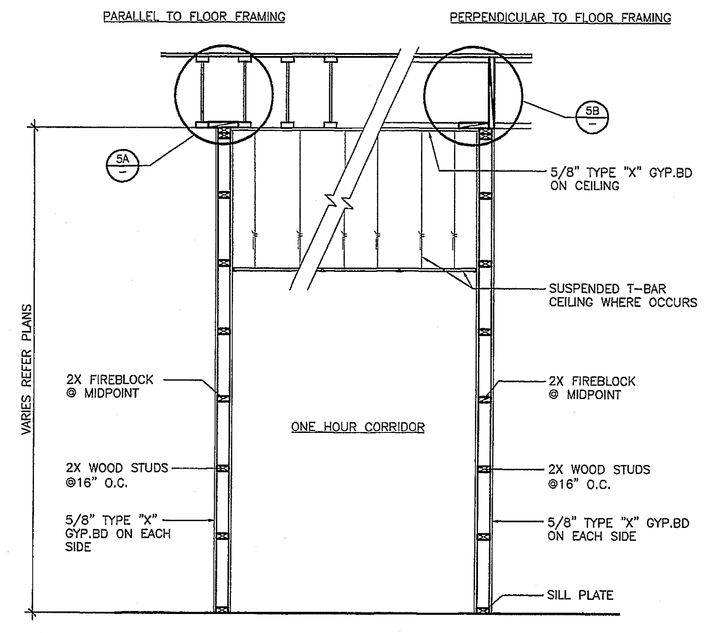

ONE HOUR RATED CORRIDOR | 1/2"=1'-0" | 5

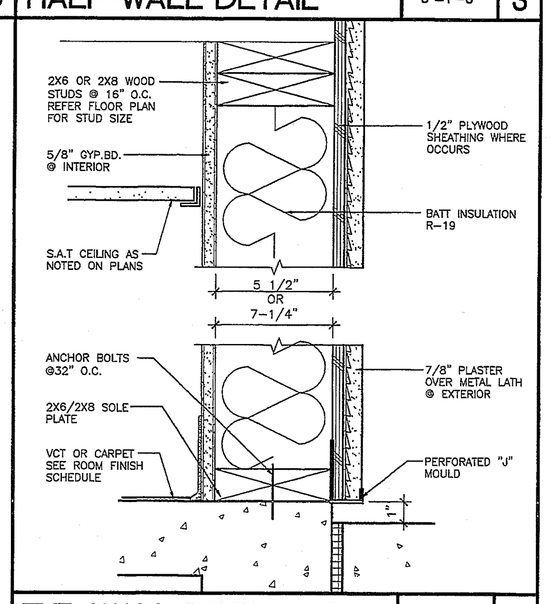

TYP. WALL DETAIL - B | 3"=1'-0" | 2

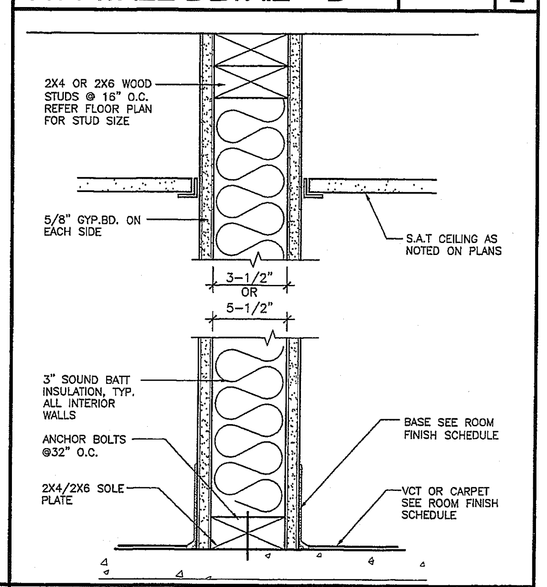

TYP. WALL DETAIL - A | 3"=1'-0" | 1

TOVEY/ SHULTZ CONSTRUCTION INC.
18261 COLLIER AVE. SUITE "A"
LAKE ELSINORE, CA 92530
PHONE (909)471-5677
FAX (909)471-5547

DESIGN/BUILD

CONSULTANT

Brian R. Bloom
Architect
350 S. Milliken Ave., Ste G, Ontario, CA 91761-7850
(909)390-7209 FAX (909)390-7509
ARCHITECTURE AND PLANNING

LICENSED ARCHITECT
BRIAN R. BLOOM
NO. C15844
5/31/07
STATE OF CALIFORNIA

PROJECT
CALVARY CHAPEL OF THE HIGH DESERT
14740 EUCALYPTUS
HESPERIA, CA
92345

PROJECT
FELLOWSHIP HALL

ISSUANCES
PLAN CHECK SUBMITTAL 03/26/07

REVISIONS

RECEIVED
MAR 30 2007

TITLE
DETAILS

SCALE
AS NOTED

DATE
6-27-06

JOB NO.
260106

A7.0