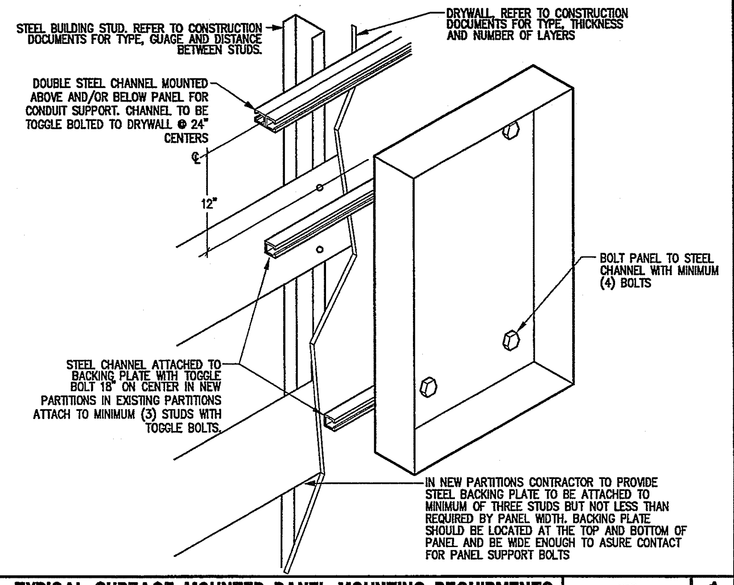


**TYPICAL SURFACE MOUNTED PANEL MOUNTING REQUIRMENTS** | NTS | 1

NOTES:

1. TYPEWRITTEN CIRCUIT SCHEDULE BEHIND CLEAR PLASTIC COVER ON INSIDE OF DOOR.
2. HINGED LOCKABLE DOOR WITHIN DOOR, FLUSH CATCH AND LOCK. ALL CABINETS KEYED ALIKE. KEYS TO MATCH EXISTING PANELBOARD WHERE ADDING TO EXISTING FACILITY.
3. WHERE INDICATED ON SCHEDULE PROVIDE VERTICALLY MOUNTED MAIN BREAKER AHEAD OF PANEL BUS.
4. FLUSH OR SURFACE MOUNTED PANELBOARD AS INDICATED ON DRAWINGS.
5. FACTORY INSTALLED METAL CIRCUIT NUMBERS SCREWED OR RIVETED TO TRIM.
6. LAMINATED, ENGRAVED NAME PLATE (MOUNTED UNDER DOOR IN AREAS EXPOSED TO PUBLIC VIEW) REFER TO SPECIFICATIONS "IDENTIFICATIONS AND WARNING SIGNS" FOR ADDITIONAL REQUIREMENTS.

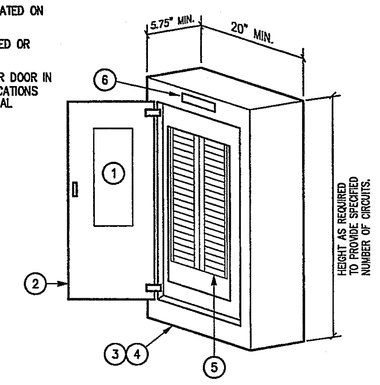


**PANEL ELEVATION** | NTS | 2

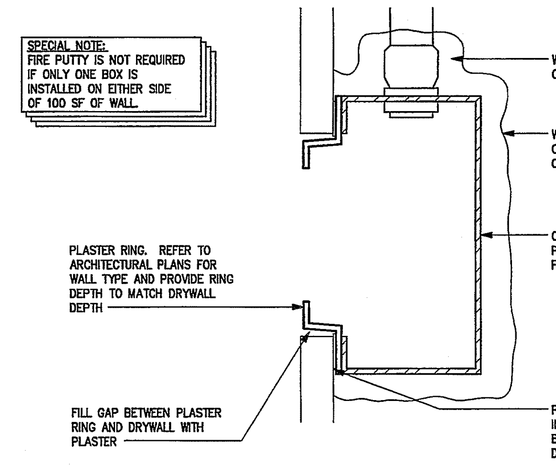


**DEVICE INSTALLATION IN FIRE RATED PARTITION** | NTS | 4

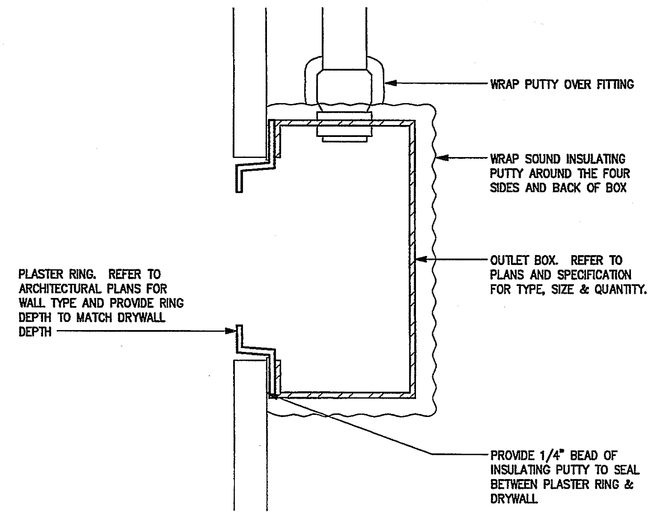


**DEVICE INSTALLATION IN SOUND RATED PARTITION** | NTS | 3

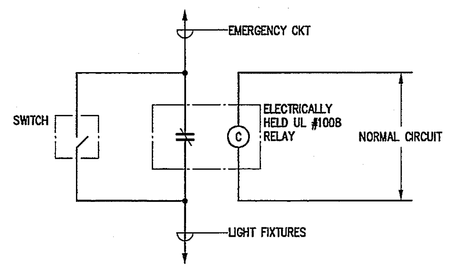


**EMERGENCY SWITCH CONTROL** | NTS | 5

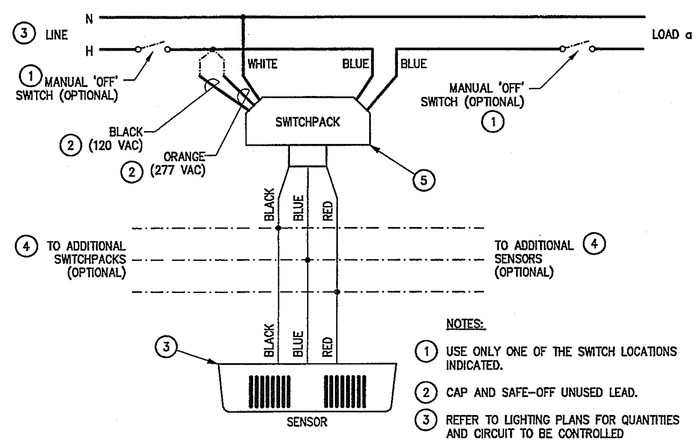


NOTES:

1. USE ONLY ONE OF THE SWITCH LOCATIONS INDICATED.
2. CAP AND SAFE-OFF UNUSED LEAD.
3. REFER TO LIGHTING PLANS FOR QUANTITIES AND CIRCUIT TO BE CONTROLLED
4. COORDINATE MAXIMUM ALLOWED WITH SUPPLIER.
5. PROVIDE A SWITCHPACK FOR EACH CIRCUIT TO BE CONTROLLED.

**OCCUPANCY SENSOR WIRING DIAGRAM-SINGLE CIRCUIT** | NTS | 6

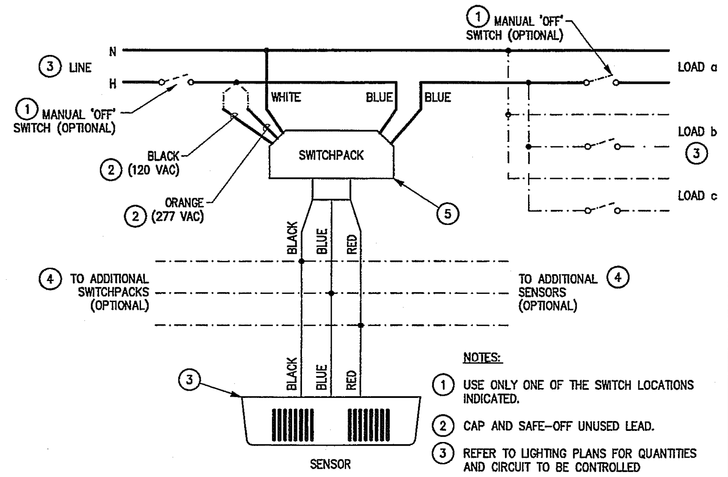


NOTES:

1. USE ONLY ONE OF THE SWITCH LOCATIONS INDICATED.
2. CAP AND SAFE-OFF UNUSED LEAD.
3. REFER TO LIGHTING PLANS FOR QUANTITIES AND CIRCUIT TO BE CONTROLLED
4. COORDINATE MAXIMUM ALLOWED WITH SUPPLIER.
5. PROVIDE A SWITCHPACK FOR EACH ADDITIONAL CIRCUIT TO BE CONTROLLED.

**OCCUPANCY SENSOR WIRING DIAGRAM-MULTIPLE SWITCHES** | NTS | 7

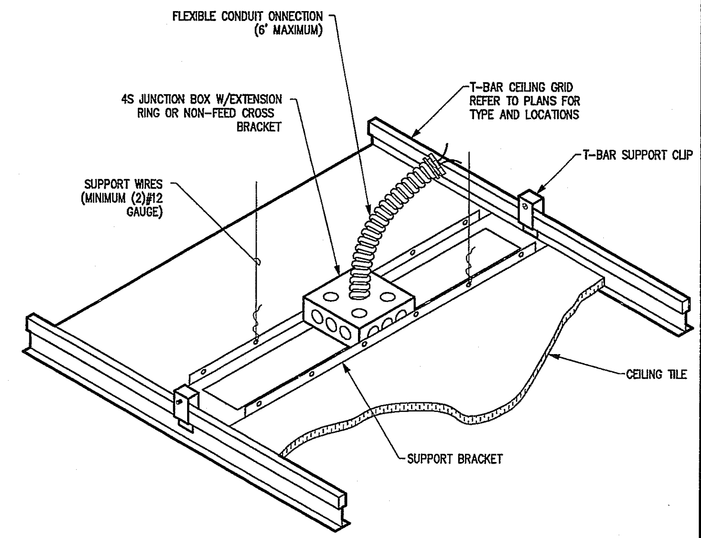


**SUPPORT FOR DEVICE ON DEMOUNTABLE CEILING** | NTS | 8

| | | |
|---|---|---|
| - | NTS | 9 |

| | | |
|---|---|---|
| - | NTS | 10 |

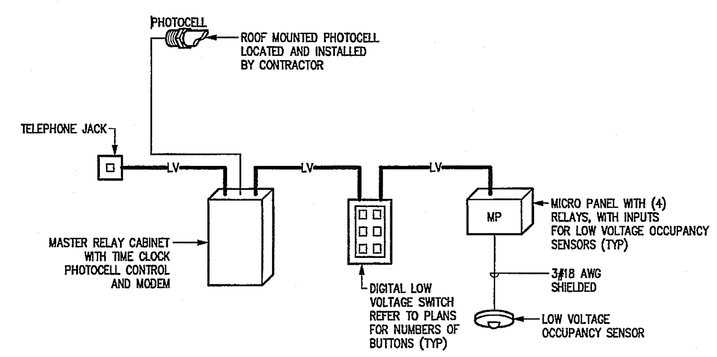


**LIGHTING CONTROL DIAGRAM** | NTS | 11

| | | |
|---|---|---|
| - | NTS | 12 |

| | | |
|---|---|---|
| - | NTS | 13 |

| | | |
|---|---|---|
| - | NTS | 14 |

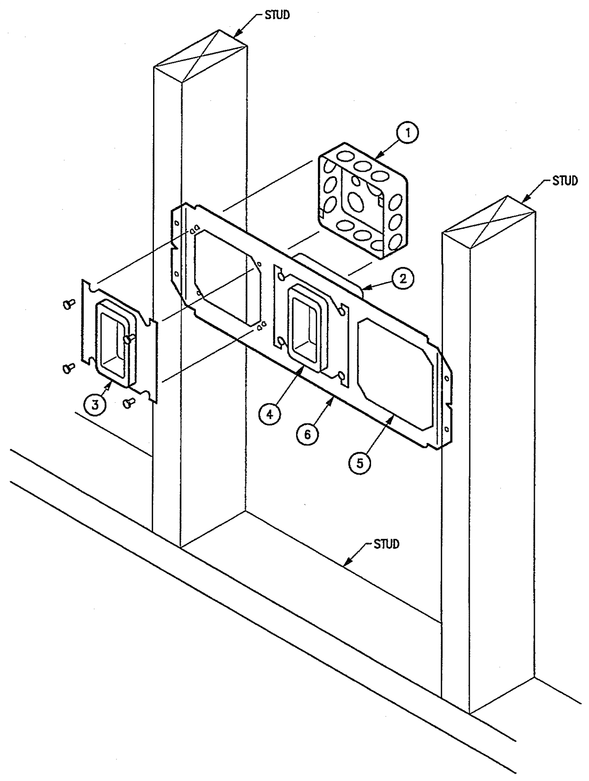


SHEET NOTES:

1. 4" SQUARE OUTLET BOX 1½" DEEP FOR DUPLEX RECEPTACLES.
2. 4" SQUARE OUTLET BOX 2⅛" DEEP FOR TEL OUTLETS.
3. PLASTER RING SINGLE OR DOUBLE GANG REFER TO ELECTRICAL DRAWING FOR NUMBER OF DEVICE. REFER TO TO ARCHITECTURAL DRAWING FOR RING DEPTH.
4. PLASTER RING SINGLE GANG. REFER TO ARCHITECTURAL DRAWING FOR RING DEPTH.
5. FUTURE DEVICE.
6. BOX MOUNTING BRACKET FOR BETWEEN STUDS.

**OUTLET BOX SUPPORT** | NTS | 15


TOVEY/ SHULTZ CONSTRUCTION INC.
18261 COLLIER AVE. SUITE "A"
LAKE ELSINORE, CA 92530
PHONE (909)471-5677
FAX (909)471-5547

DESIGN/BUILD

CONSULTANT

Brian R. Bloom
Architect
350 S. Milliken Ave., Ste. G, Ontario, CA 91761-7850
(909) 390-7269 FAX: (909) 390-7509
ARCHITECTURE AND PLANNING

KOCHER SCHIRRA GOHARIZI
Consulting Engineers, Inc.
111 N JACKSON SUITE 125 GLENDALE CA 91206-4315
PHONE: 818.240.5630 FAX: 818.240.5144


REGISTERED PROFESSIONAL ENGINEER
MANOUCHER GOHARIZI
No. E-13390
3/31/08
ELECTRICAL
STATE OF CALIFORNIA

PROJECT
**CALVARY CHAPEL OF THE HIGH DESERT**
**14740 EUCALYPTUS**
**HESPERIA, CA**
**92345**

PROJECT
**FELLOWSHIP HALL**

ISSUANCES

| | |
|---|---|
| OWNERS MEETING | 03-08-04 |
| PLANNING REVIEW | 06-01-06 |
| PLANCHECK SUBMITTAL | 03-23-07 |

REVISIONS


WEISER IRON
MAR 30 2007
RECEIVED


TITLE
**DETAILS**

SCALE
AS NOTED

DATE
02.09 07

JOB NO.
8988

E6.0