TITLE 24 COMPLIANCE

CERTIFICATE OF COMPLIANCE (Part 1 of 2) MECH-1-C

PROJECT NAME: Calvary Chapel of the High Desert		DATE: 06/06/2006	
PROJECT ADDRESS: 14740 Eucalyptus, Hesperia, CA. 92392		Building Permit #	
PRINCIPAL DESIGNER - MECHANICAL: Cirilo Gatilao - CEDG, Inc.	TELEPHONE: (818) 566-7755		
DOCUMENTATION AUTHOR: C.E.D.G., Inc.	TELEPHONE: (818) 566-7755	Checked by/Date Enforcement Agency Use	

GENERAL INFORMATION

DATE OF PLANS: 06/06/06	BUILDING CONDITIONED FLOOR AREA: 15,210 Sq.Ft.		CLIMATE ZONE: 14
BUILDING TYPE	[X] NONRESIDENTIAL	[ ] HIGH RISE RESIDENTIAL	[ ] HOTEL/MOTEL GUEST ROOM
PHASE OF CONSTRUCTION	[X] NEW CONSTRUCTION	[ ] ADDITION [ ] ALTERATION	[ ] EXISTING + ADDITION
METHOD OF MECHANICAL COMPLIANCE	[X] PRESCRIPTIVE	[ ] PERFORMANCE	
PROOF OF ENVELOPE COMPLIANCE	[ ] PREVIOUS ENVELOPE PERMIT	[ ] ENVELOPE COMPLIANCE ATTACHED	

STATEMENT OF COMPLIANCE

This Certificate of Compliance lists the building features and performance specifications needed to comply with Title 24, Parts 1 and 6 of the California Code of Regulations. This certificate applies only to building mechanical requirements.

The documentation preparer hereby certifies that the documentation is accurate and complete.

DOCUMENTATION AUTHOR	SIGNATURE	DATE
Benjie Collantes		

The Principal Mechanical Designer hereby certifies that the proposed building design represented in this set of construction documents is consistent with the other compliance forms and worksheets, with the specifications, and with any other calculations submitted with this permit application. The proposed building has been designed to meet the mechanical requirements contained in Sections 110 through115, 120 through 124, 140 through 142, 144 and 145.

Please check one:

- [X] I hereby affirm that I am eligible under the provisions of Division 3 of the Business and Professions Code to sign this document as the person responsible for its preparation; and that I am licensed in the State of California as a civil engineer, or mechanical engineer or I am a licensed architect.
- [ ] I affirm that I am eligible under the exemption to Division 3 of the Business and Professions Code by Section 5537.2 or 6737.3 to sign this document as the person responsible for its preparation; and that I am a licensed contractor performing this work.
- [ ] I affirm that I am eligible under the exemption to Division 3 of the Business and Professions Code to sign this document because it pertains to a structure or type of work described pursuant to Business and Professions Code sections 5537, 5538, and 6737.1.

PRINCIPAL MECHANICAL DESIGNER - NAME	SIGNATURE	DATE	LIC. #
Cirilo Gatilao - CEDG, Inc.			

MECHANICAL MANDATORY MEASURES

Indicate location on plans of Note Block for Mandatory Measures: M-1.0

INSTRUCTIONS TO APPLICANT

For detailed instructions on the use of this and all Energy Efficiency Standards compliance forms, please refer to the Nonresidential Manual published by the California Energy Commission.

MECH-1: Required on plans for all submittals. Parts 2 may be incorporated in schedules on plans.
MECH-2: Required for all submittals, but may be incorporated in schedules on plans.

MECH-3: Required for all submittals unless required outdoor ventilation rates and airflows are shown on plans per Section 4.3.4.

MECH-4: Required for Prescriptive submittals.
MECH-5: Optional. Performance use only for mechanical distribution summary.

EnergyPro 3.1 — Job Number: 6324

CERTIFICATE OF COMPLIANCE (Part 2 of 2) MECH-1-C

PROJECT NAME: Calvary Chapel of the High Desert	DATE: 06/06/2006

Designer:

This form is to be used by the designer and attached to the plans. Listed below are all the acceptance tests for mechanical systems. The designer is required to check the boxes by all acceptance tests that apply and list all equipment that requires an acceptance test. If all equipment of a certain type requires a test, list the equipment description and the number of systems to be tested in parentheses. The NJ number designates the Section in the Appendix of the Nonresidential ACM Manual that describes the test. Also indicate the person responsible for performing the tests (i.e. the installing contractor, design professional or an agent selected by the owner). Since this form will be part of the plans, completion of this section will allow the responsible party to budget for the scope of work appropriately.

Building Departments:

SYSTEM ACCEPTANCE. Before an occupancy permit is granted for a newly constructed building or space, or a new space-conditioning system serving a building or space is operated for normal use, all control devices serving the building or space shall be certified as meeting the Acceptance Requirements for Code Compliance.

In addition a Certificate of Acceptance, MECH-1-A Form shall be submitted to the building department that certifies plans, specifications, installation certificates, and operating and maintenance information meet the requirements of Section 10-103(b) and Title 24 Part 6.

STATEMENT OF COMPLIANCE

[ ] MECH-2-A: Ventilation System Acceptance Document -Variable Air Volume Systems Outdoor Air Acceptance -Constant Air Volume Systems Outdoor Air Acceptance Equipment requiring acceptance testing	
[ ] MECH-3-A: Packaged HVAC Systems Acceptance Document Equipment requiring acceptance testing	
[ ] MECH-4-A: Air Distribution Acceptance Document Equipment requiring acceptance testing	
[ ] MECH-5-A: Air-Side Economizer Acceptance Document Equipment requiring acceptance testing	
[ ] MECH-6-A: Demand Control Ventilation Acceptance Document Equipment requiring acceptance testing	
[ ] MECH-7-A: Supply Fan Variable Flow Control Acceptance Document Equipment requiring acceptance testing	
[ ] MECH-8-A: -Hydronic System Control Acceptance Document -Variable Flow Controls -Automatic Isolation Controls -Water-loop Heat Pump Controls -Variable Frequency Controls Equipment requiring acceptance testing	

EnergyPro 4.0 by EnergySoft

GENERAL NOTES

1. MECHANICAL DRAWINGS ARE ESSENTIALLY DIAGRAMMATIC TO THE EXTENT THAT MANY OFFSETS, BENDS, ELBOWS, SPECIAL FITTINGS AND EXACT LOCATIONS OF EQUIPMENT, DUCTWORK, PIPING & RELATED APPURTENANCES ARE NOT INDICATED. THE CONTRACTOR SHALL CAREFULLY STUDY THE DRAWINGS AND ACTUAL FIELD CONDITIONS IN ORDER TO DETERMINE THE BEST METHODS, EXACT LOCATION, ROUTING, ANY OBSTRUCTIONS, WORK BY OTHER TRADES, ETC., WHICH AFFECT THE INSTALLATION OF HIS WORK. REFER TO SPECIFICATIONS FOR ADDITIONAL REQUIREMENTS.
2. CONTRACTOR SHALL COORDINATE ALL ROOF, FLOOR & WALL OPENINGS FOR DUCTWORK, PIPING, ETC., WITH THE GENERAL CONTRACTOR TO ACCOMMODATE DUCT & PIPING ARRANGEMENT INDICATED ON THE DRAWINGS.
3. SUBMIT SHOP DRAWINGS OF EQUIPMENT LAYOUT, DUCT LAYOUT, PIPING LAYOUT, DUCT SUPPORTS & PIPE SUPPORTS AND RELATED ACCESSORIES PRIOR TO FABRICATING ANY OF THE MATERIALS REQUIRED FOR THIS PROJECT. REFER TO SPECIFICATIONS FOR ADDITIONAL INFORMATION.
4. ALL DUCTWORK AND PIPING IN BUILDING SHALL BE INSTALLED CONCEALED ABOVE CEILING OR IN WALL EXCEPT IN LOCATIONS PRE-APPROVED BY THE ARCHITECT TO BE EXPOSED.
5. AESTHETICS ARE A VERY IMPORTANT COMPONENT OF THIS PROJECT. INSTALLATION OF MECHANICAL WORK SHALL BE OF THE HIGHEST QUALITY AND CRAFTSMANSHIP POSSIBLE.
6. ALL BRACING OF DUCTS AND PIPINGS SHALL BE INSTALLED IN ACCORDANCE WITH SMACNA GUIDELINES AS APPROVED BY CITY CODES.
7. WHERE BRACING DETAILS ARE NOT SHOWN ON THE DRAWINGS OR IN THE GUIDELINES, THE FIELD INSTALLATION SHALL BE SUBJECT TO THE APPROVAL OF THE CITY BUILDING DEPARTMENT.
8. A COPY OF THE GUIDELINES PUBLISHED BY SMACNA AND APPROVED BY CITY BUILDING DEPARTMENT SHALL BE PROVIDED BY THE CONTRACTOR AND KEPT ON THE JOB AT ALL TIMES.

MECHANICAL MANDATORY MEASURES

CONTROLS

EACH SPACE CONDITIONING SYSTEM SHALL BE INSTALLED WITH AN AUTOMATIC TIME SWITCH WITH AN ACCESSIBLE MANUAL OVERRIDE THAT ALLOWS OPERATION OF THE SYSTEM DURING OFF-HOURS FOR UP TO 4 HOURS. THE TIME SWITCH SHALL BE CAPABLE OF PROGRAMMING DIFFERENT SCHEDULES FOR WEEKDAYS AND WEEKENDS, INCORPORATE AN AUTOMATIC HOLIDAY "SHUT-OFF" FEATURE THAT TURNS OFF ALL LOADS FOR AT LEAST 24 HOURS, THEN RESUMES THE NORMALLY SCHEDULED OPERATION AND HAS PROGRAM BACKUP CAPABILITIES THAT PREVENT THE LOSS OF THE DEVICES'S PROGRAM AND TIME SETTING FOR AT LEAST 10 HOURS IF POWER IS INTERRUPTED.

EACH SPACE CONDITIONING ZONE SHALL BE CONTROLLED BY AN INDIVIDUAL THERMOSTATIC CONTROL THAT RESPONDS TO TEMPERATURE WITHIN THE ZONE. WHERE USED TO CONTROL HEATING, THE CONTROL SHALL BE ADJUSTABLE DOWN TO 55^ F OR LOWER. FOR COOLING, THE CONTROL SHALL BE ADJUSTABLE UP TO 85^ F OR HIGHER. WHERE USED TO CONTROL BOTH HEATING AND COOLING, THE CONTROL SHALL BE CAPABLE OF PROVIDING A DEAD BAND OF AT LEAST 5.0 F WITHIN WHICH THE SUPPLY OF HEATING AND COOLING IS SHUT OFF OR REDUCED TO A MINIMUM.

THERMOSTATS SHALL HAVE NUMERIC SETPOINTS IN DEG F.

THERMOSTATS SHALL HAVE ADJUSTABLE SETPOINTS STOPS ACCESSIBLE ONLY TO AUTHORIZED PERSONNEL.

EQUIPMENT AND SYSTEMS EFFICIENCY

ANY APPLIANCE FOR WHICH THERE IS A CALIFORNIA STANDARD ESTABLISHED IN THE APPLIANCE EFFICIENCY STANDARDS MAY BE INSTALLED ONLY IF THE MANUFACTURER HAS CERTIFIED TO THE COMMISSION, AS SPECIFIED IN THOSE REGULATIONS, THAT THE APPLIANCE COMPLIES WITH THE APPLICABLE STANDARD FOR THAT APPLIANCE. INCLUDED ARE ROOM AIR CONDITIONERS, CENTRAL AIR CONDITIONING HEAT PUMPS (REGARDLESS OF CAPACITY, EXCEPT THAT REQUIREMENTS FOR CENTRAL AIR CONDITIONING HEAT PUMPS WITH COOLING CAPACITY OF 135,000 BTU/HR OR MORE APPLY TO HEATING PERFORMANCE BUT NOT COOLING PERFORMANCE), OTHER CENTRAL AIR CONDITIONERS WITH A COOLING CAPACITY LESS THAN 135,000 BTU/HR, FAN TYPE CENTRAL FURNACES WITH INPUT RATE LESS THAN 400,000 BTU/HR. BOILERS, WALL FURNACES, FLOOR FURNACES, ROOM HEATERS, UNIT HEATERS, AND DUCT FURNACES SHALL HAVE BEEN CERTIFIED TO THE CALIFORNIA ENERGY COMMISSION BY ITS MANUFACTURER TO COMPLY WITH THE APPLIANCE EFFICIENCY STANDARDS.

THE FOLLOWING SPACE CONDITIONING EQUIPMENT MAY BE INSTALLED ONLY IF THE MANUFACTURER HAS CERTIFIED THAT THE EQUIPMENT MEETS OR EXCEEDS ALL APPLICABLE EFFICIENCY REQUIREMENTS LISTED IN 112 OF THE ENERGY EFFICIENCY STANDARDS: ALL AIR CONDITIONERS, HEAT PUMPS AND CONDENSING UNITS @ 135,000 BUT/HR, ALL WATER CHILLERS, ALL GAS-FIRED BOILERS @ 300,000 BTU/HR, ALL OIL-FIRED BOILERS @ 225,000 BTU/HR, AND ALL WARM AIR FURNACES AND COMBINATION WARM AIR FURNACES/AIR-CONDITIONING UNITS @ 225,000 BTU/HR. FAN TYPE CENTRAL FURNACES SHALL NOT HAVE A PILOT LIGHT.

AIR HANDLING DUCT SYSTEMS, UNLESS SPECIFIED IN THE SPECIFICATIONS SHALL BE CONSTRUCTED, INSTALLED, SEALED, AND INSULATED AS PROVIDED IN CHAPTER 6 OF THE UNIFORM MECHANICAL CODE, AS A MINIMUM.

VENTILATION

CONTROLS SHALL BE PROVIDED TO ALLOW OUTSIDE AIR DAMPERS OR DEVICES TO BE OPERATED AT THE VENTILATION RATES AS SPECIFIED IN THESE PLANS.

GRAVITY OR AUTOMATIC DAMPERS INTERLOCKED AND CLOSED ON FAN SHUTDOWN SHALL BE PROVIDED ON THE OUTSIDE AIR INTAKES AND DISCHARGES OF ALL SPACE CONDITIONING AND EXHAUST SYSTEMS.

ALL GRAVITY VENTILATING SYSTEMS SHALL BE PROVIDED WITH AUTOMATIC OR READILY ACCESSIBLE MANUALLY OPERATED DAMPERS IN ALL OPENINGS TO THE OUTSIDE, EXCEPT FOR COMBUSTION AIR OPENINGS.

AIR BALANCING: ALL SPACE CONDITIONING AND VENTILATION SYSTEMS SHALL BE BALANCED TO THE QUANTITIES SPECIFIED IN THESE PLANS, IN ACCORDANCE WITH THE NATIONAL ENVIRONMENTAL BALANCING BUREAU (NEBB) PROCEDURAL STANDARDS, OR ASSOCIATED AIR BALANCE COUNCIL (AABC) NATIONAL STANDARDS.

OUTSIDE AIR CERTIFICATION: THE SYSTEM SHALL PROVIDE THE MINIMUM OUTSIDE AIR AS SHOWN ON THE MECHANICAL DRAWINGS, AND SHALL BE MEASURED AND CERTIFIED BY THE INSTALLING LICENSED C-20 MECHANICAL CONTRACTOR.

LEGEND AND ABBREVIATIONS

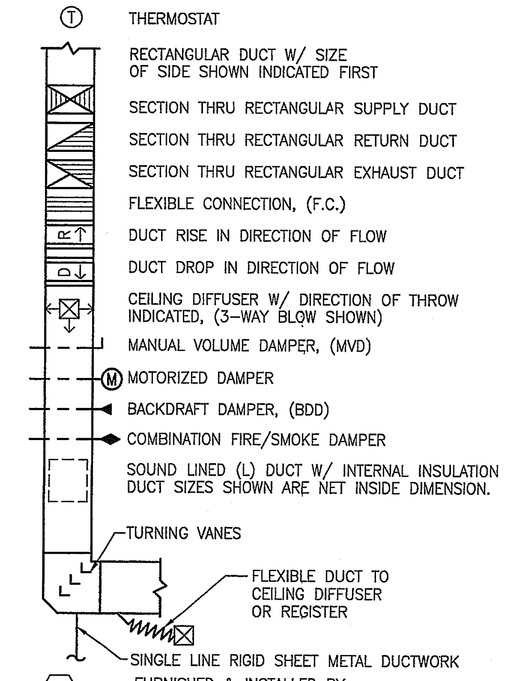

ABV	ABOVE
BEL	BELOW
BTU	BRITISH THERMAL UNIT
CAP	CAPACITY
CD	CEILING DIFFUSER
CFM	CUBIC FEET PER MINUTE
CG	CEILING GRILLE
CONC	CONCRETE
COND	CONDENSATE
CONN	CONNECTION
CONT	CONTINUATION
CR	CEILING REGISTER
D	DRAIN, CONDENSATE
DB	DRY BULB
DL	DOOR LOUVER
DN	DOWN
DTR	DOWN THRU ROOF
EA	EXHAUST AIR
EAR	EXHAUST AIR REGISTER
(E)	EXISTING
ENT	ENTERING
EXH	EXHAUST
F.A.	FACE AREA
F	FAHRENHEIT
FLA	FULL LOAD AMPS
FPI	FINS PER INCH
FPM	FEET PER MINUTE
FLEX	FLEXIBLE
GALV.	GALVANIZED
GA	GAUGE
GV	GRAVITY VENTILATOR
HP	HORSEPOWER
IN	INCH
LBS	POUNDS
LVG	LEAVING
M.A.	MIXED AIR
MAX	MAXIMUM
MBH	1000 BTU'S PER HOUR
MIN	MINIMUM
MD	MOTORIZED DAMPER
MVD	MANUAL VOLUME DAMPER
(N)	NEW
NTS	NOT TO SCALE
OPER. WT.	OPERATING WEIGHT
OPNG	OPENING
OSA	OUTSIDE AIR
PD	PRESSURE DROP
PH	PHASE
PRESS	PRESSURE
POC	POINT OF CONNECTION
PSI	POUNDS PER SQUARE INCH
RA	RETURN AIR
RAR	RETURN AIR REGISTER
REQ'D	REQUIRED
RLA	RATED LOAD AMPS
RPM	REVOLUTIONS PER MINUTE
Ø	ROUND DUCT
SA	SUPPLY AIR
SP	STATIC PRESSURE
SF	SQUARE FEET
SWR	SIDEWALL REGISTER (SA)
TEMP	TEMPERATURE
T'STAT	THERMOSTAT
TYP	TYPICAL
UTR	UP THRU ROOF
V	VOLT
W/	WITH
WB	WET BULB
W.G.	WATER GAUGE

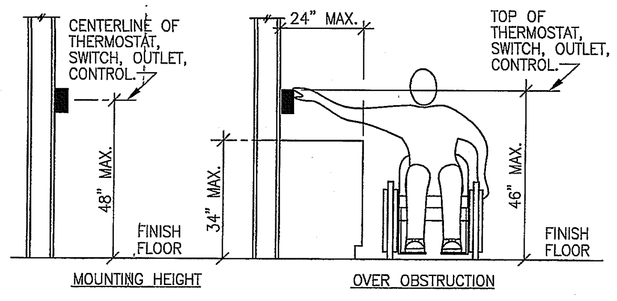

MOUNTING HEIGHT

SCALE: NTS OUTLETS, INTERCOM, CONTROLS, ETC.

TOVEY/ SHULTZ CONSTRUCTION INC.
18261 COLLIER AVE. SUITE "A"
LAKE ELSINORE, CA 92530
PHONE (909)471-5677
FAX (909)471-5547

DESIGN/BUILD

CONSULTANT

Brian R. Bloom Architect
350 S. Milliken Ave., Ste. G, Ontario, CA 91761-7850
(909) 390-7209 FAX: (909) 390-7509
ARCHITECTURE AND PLANNING

REGISTERED ARCHITECT BRETT A. STONE NO. C17247 EXP. 7/31/07 STATE OF CALIFORNIA

REGISTERED PROFESSIONAL ENGINEER CIRILO G. GATILAO No. 024316 EXP 9-30-08 MECHANICAL STATE OF CALIFORNIA

CEDG
CALIFORNIA ENGINEERING DESIGN GROUP, INC.
2725 West Burbank Blvd.
BURBANK, CA. 91505
(818) 566-7755

PROJECT
CALVARY CHAPEL OF THE HIGH DESERT
14740 EUCALYPTUS
HESPERIA, CA
92345

PROJECT
FELLOWSHIP HALL

ISSUANCES

OWNERS MEETING	03-08-04
PLANNING REVIEW	06-01-06
PLANNING SUBMITTAL	01-31-07
FIRST PLAN CHECK	03-26-07

REVISIONS

WEISER BROS
MAR 30 2007
RECEIVED

TITLE
LEGEND, ABBREVIATION, TITLE 24 COMPLIANCE AND GENERAL NOTES.

SCALE

DATE 6-27-06
JOB NO. 260106

M-1.0

CEDG NO. 6478