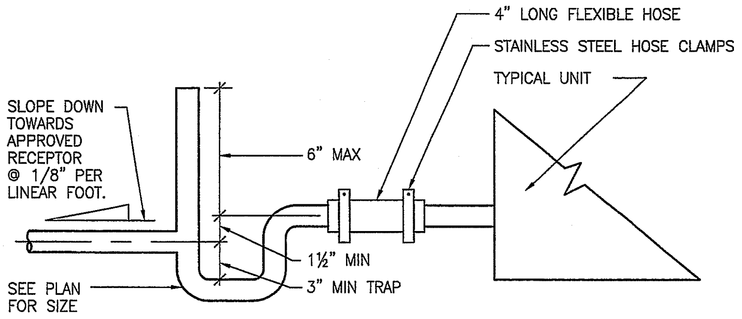

NOTES:

1. CONDENSATE DRAIN PIPING SHALL BE TYPE "M" COPPER.

CONSENDATE DRAIN EUQIP. CONNECTION

SCALE: NONE — 1

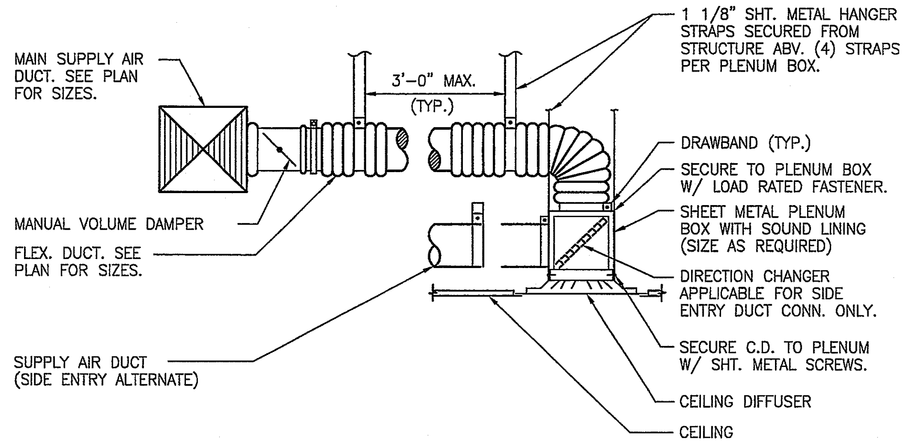

FLEXIBLE DUCT TO CD OR CR

SCALE: NONE — 2

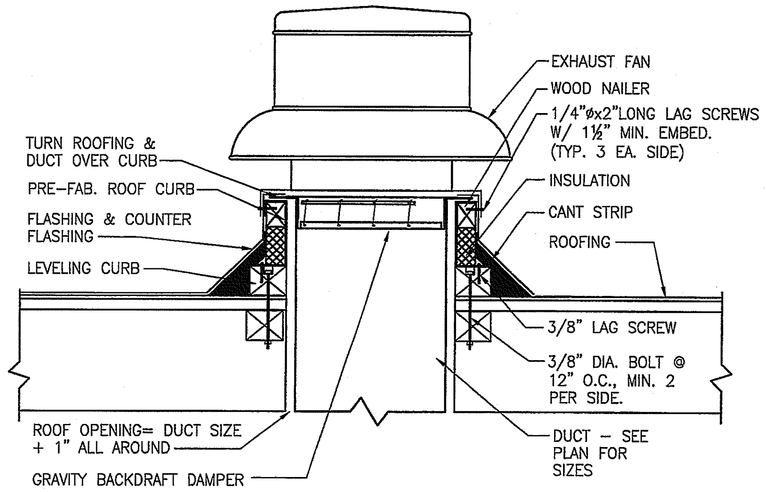

ROOF MOUNTED EXHAUST FAN DETAIL

SCALE: NONE — 3

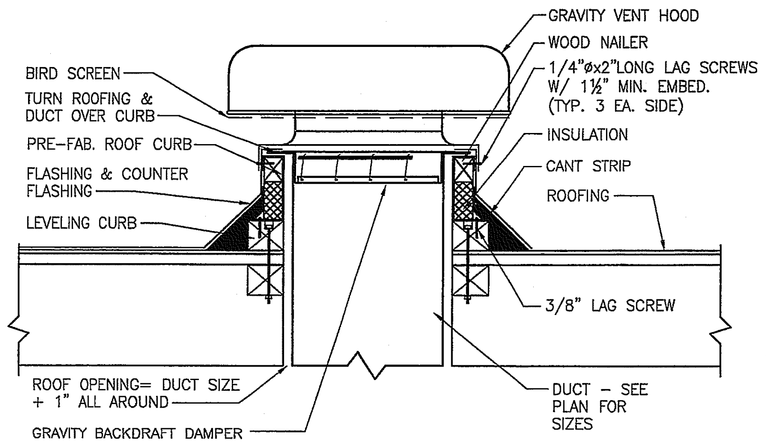

GRAVITY VENTILATOR DETAIL

SCALE: NONE — 4

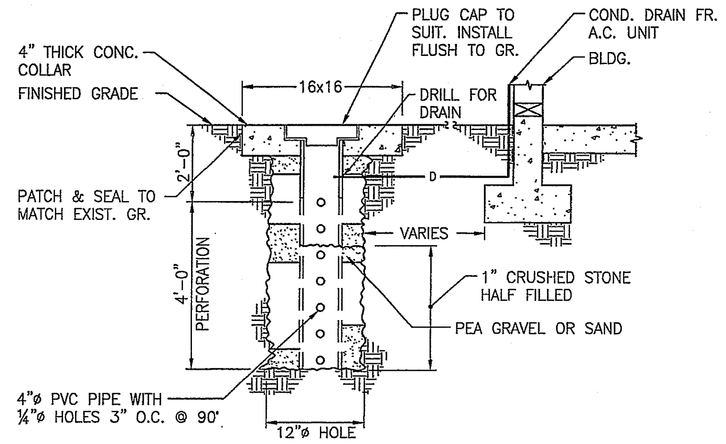

DRYWELL DETAIL

SCALE: NONE — 5

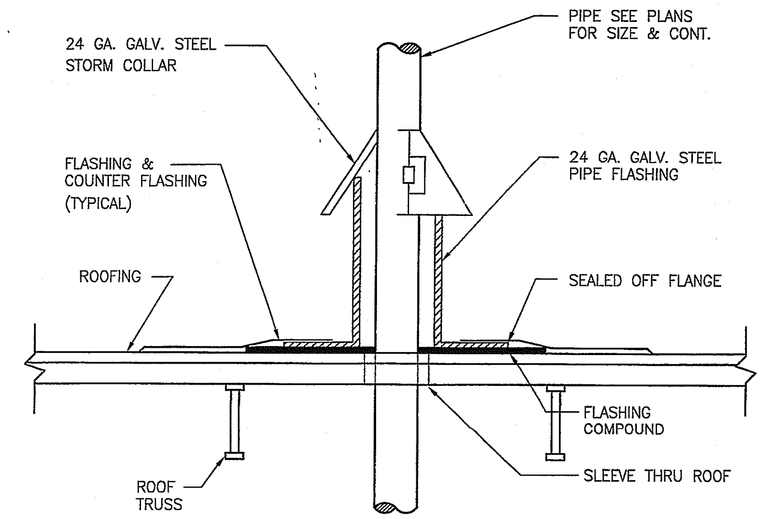

PIPE THRU ROOF DETAIL

SCALE: NONE — 6

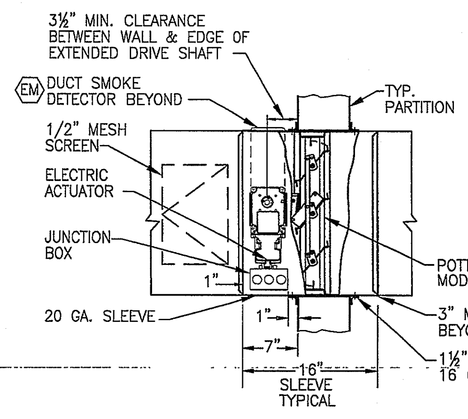

COMBINATION FIRE/SMOKE DAMPER SPECIFICATIONS:

FIRE DAMPERS SHALL BE LABELED AND LISTED BY CALIFORNIA STATE FIRE MARSHAL AND/OR UNDERWRITERS LABORATORIES. ALL DAMPERS MUST ALSO BE LEAKAGE RATED AND LABLED UNDER UNDERWRITER LABORATORIES STD. 555S. WITH METAL SEALS ALLOWING NO MORE THAN 10 CFM/SQ.FT. AT 1" W.G. TO 250°F FOR A FULL 30 MIN. CAN BE MOTOR OPERATED. TORQUE REQ'D. TO MAINTAIN LEAKAGE RATE NOT TO EXCEED 0 LBS. TORQUE. DAMPERS SHALL BE INSTALLED PER MANUFACTURERS INSTALLATION INSTRUCTIONS AND/OR STATE FIRE MARSHAL LISTING NO. 03225. POTTORFF COMPANY, INC. (NO RUBBER SEALS ALLOWED) (LISTING NO.03225:0368:110 AND 03230:0368:111) PROVIDE NON STALL SHUNT MOTOR , 23 VA. MAXIMUM. OR APPROVED EQUAL. MANUFACTURER'S SPECIFICATIONS AND INSTALLATION SHEET TO BE AVAILABLE ON THE JOB SITE FOR INSPECTING AGENCIES.

COMBINATION FIRE/SMOKE DAMPER

OPENING TO BE SINGLE HEADER FRAMING FOR STEEL. SUGGESTED CLEARANCE BETWEEN SLEEVE AND OPENING 1/8" FOR EACH 12" DAMPER WIDTH AND HEIGHT FOR EXPANSION. DAMPER TO BE HELD IN PLACE BY RETAINING ANGLES ATTACHED TO SLEEVE ON BOTH SIDES OF PARTITION, AND AROUND ENTIRE PERIMETER OF THE SLEEVE. ANGLES TO BE MIN. 16 GA. 1-1/2" X 1-1/2" OR LARGER AS REQUIRED TO PROVIDE A MIN. 1" OVERLAP OF THE OPENING. ANGLES MAY BE MITERED, BUTTED OR OVERLAPPED AT THE CORNERS. ATTACH ANGLES TO THE SLEEVE (NOT THE PARTITION) WITH SHEET METAL SCREWS, BOLTS OR WELDS AS PER MANUFACTURERS INSTRUCTIONS. CONNECT DUCT TO SLEEVE WITH "S" TYPE SLIP CONNECTIONS.

COMBINATION FIRE/SMOKE DAMPER DETAIL

SCALE: NONE — 7

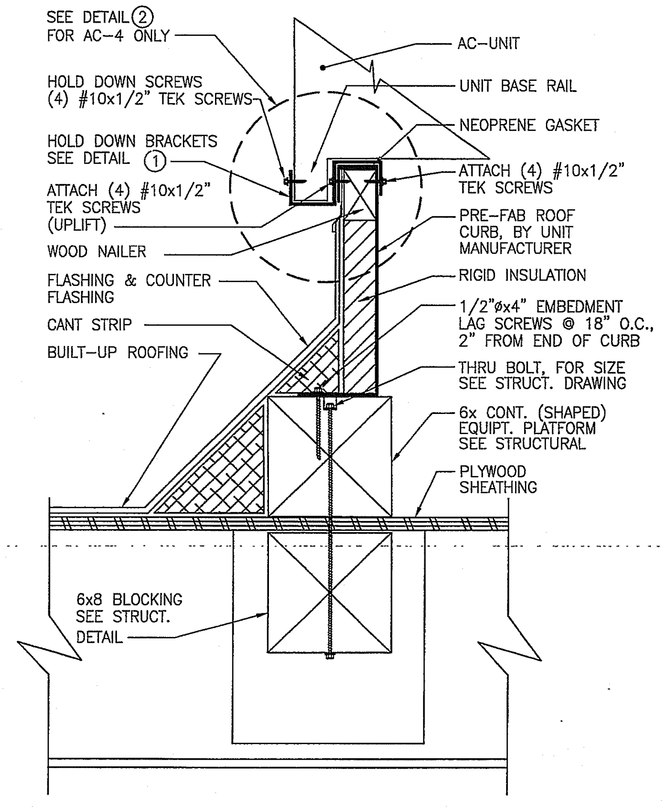

SECTION A-A

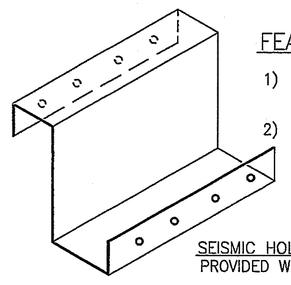

FEATURES:

1) MANUFACTURED FROM 16 GAUGE GALVANIZED STEEL.
2) INCLUDES #10 TEK SCREW PACKAGE.

SEISMIC HOLD DOWN BRACKET PROVIDED WITH UNIT

DETAIL 1

SECURE EQUIP. FRAME TO CURB AS RECOMMENDED BY MANUFACTURER W/ RETAINER BRACKET IN EA. CORNER OF THE BASE

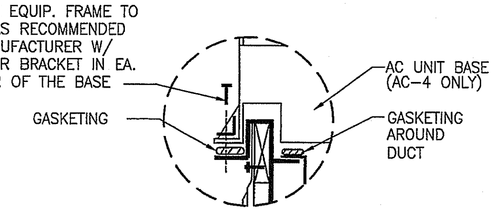

DETAIL 2

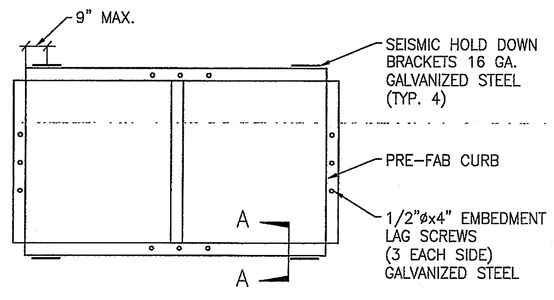

PLAN

AC UNIT MOUNTING DETAIL

SCALE: NONE — 8

CEDG NO. 6478

TOVEY/ SHULTZ CONSTRUCTION INC.
18261 COLLIER AVE. SUITE "A"
LAKE ELSINORE, CA 92530
PHONE (909)471-5677
FAX (909)471-5547

DESIGN/BUILD

CONSULTANT

Brian R. Bloom
Architect
350 S. Milliken Ave., Ste. G, Ontario, CA 91761-7850
(909) 390-7269 FAX: (909) 390-7509
ARCHITECTURE AND PLANNING

LICENSED ARCHITECT BRETT A. STONE NO. C17047 7/31/07 EXP. DATE STATE OF CALIFORNIA

REGISTERED PROFESSIONAL ENGINEER CHRIS G. GATZKE EXP. 9-30-06 MECHANICAL STATE OF CALIFORNIA

CEDG
CALIFORNIA ENGINEERING DESIGN GROUP, INC.
2725 West Burbank Blvd.
BURBANK, CA. 91505
(818) 566-7755

PROJECT

CALVARY CHAPEL OF THE HIGH DESERT
14740 EUCALYPTUS
HESPERIA, CA
92345

PROJECT

FELLOWSHIP HALL

ISSUANCES

OWNERS MEETING	03-08-04
PLANNING REVIEW	06-01-06
PLANNING SUBMITTAL	01-31-07
FIRST PLAN CHECK	03-26-07

REVISIONS

WEISER IRON
MAR 30 2007
RECEIVED

TITLE

DETAILS

SCALE

DATE 6-27-06

JOB NO. 260106

M-3.0