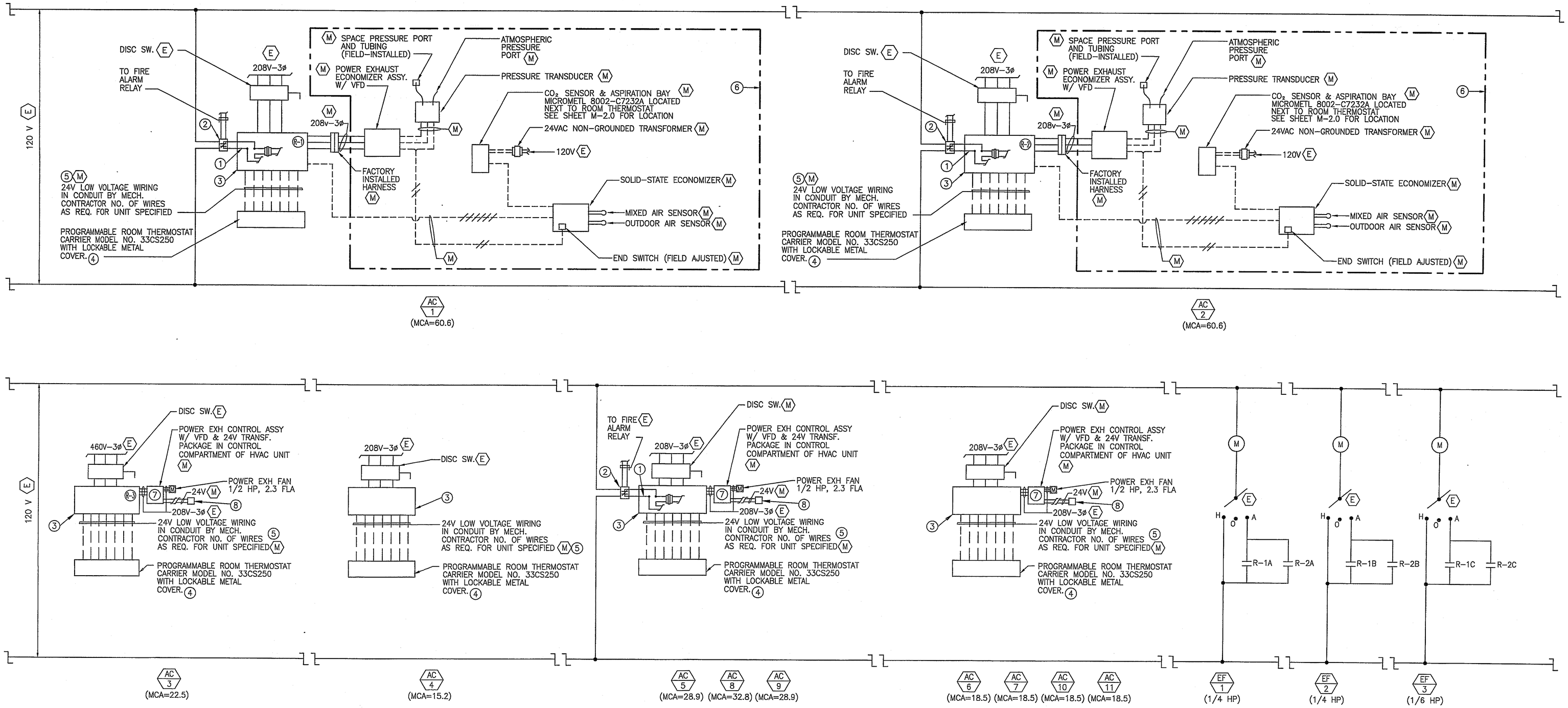

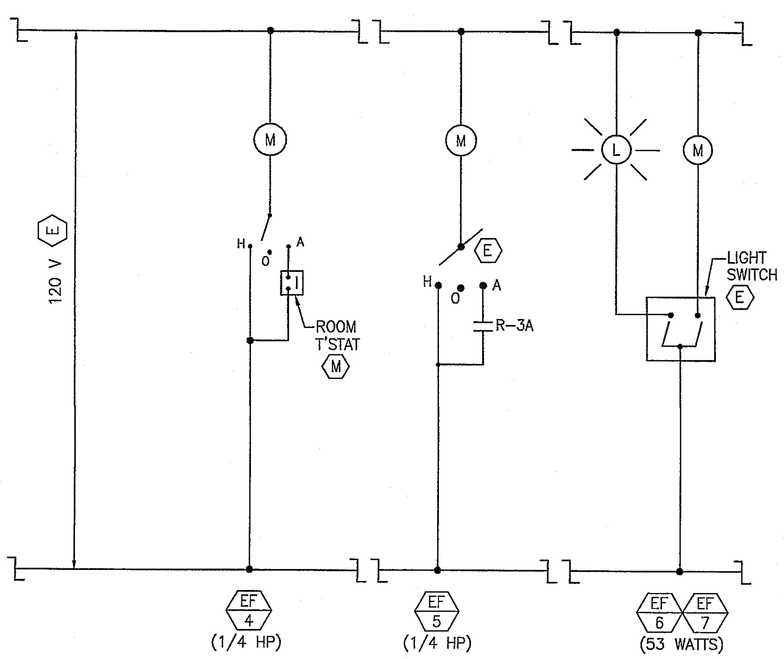

NOTES:

1. BREAK THE "R" WIRE BETWEEN TRANSFORMER & TIME DELAY RELAY.
2. DUCT SMOKE DETECTOR WITH PROGRAMMABLE FIRE ALARM RELAY NORMALLY CLOSED CONTACT, FURNISHED AND WIRED BY ELECT. CONTRACTOR, INSTALLED IN DUCT BY MECH. CONTRACTOR. (SEE ELECTRICAL DWGS. & SPECS.) (EM)
3. PACKAGED GAS/ELECTRIC UNIT CONTROL PANEL.
4. SET THERMOSTAT FOR CONSTANT FAN OPERATION.
5. LOW VOLTAGE WIRING AND CONDUIT FURNISHED AND INSTALLED BY MECHANICAL CONTRACTOR.
6. POWER EXHAUST ECONOMIZER PACKAGE FURNISHED (E) W/ AC UNIT. HIGH VOLTAGE WIRING IN CONDUIT LOW VOLTAGE WIRING IN CONDUIT (M)
7. UNIT COMPLETE W/ CENTRIFUGAL MODULATING POWER EXHAUST ECONOMIZER, CONTROL BOX (NEMA 3R) W/ TRANSFORMER, CONTACTORS, & RELAYS–FACTORY MOUNTED AND WIRED. PROVIDE CO_2 SENSOR & CONTROLLER. SEE NOTE (8)
8. MICRO SWITCH SECURE TO ECONOMIZER ACTUATOR CRANK ARM. (M)

SCHEMATIC CONTROL WIRING DIAGRAMS

SCALE: NONE

1

CEDG NO. 6478

TOVEY/ SHULTZ CONSTRUCTION INC.
18261 COLLIER AVE. SUITE "A"
LAKE ELSINORE, CA 92530
PHONE (909)471–5677
FAX (909)471–5547

DESIGN/BUILD

CONSULTANT

Brian R. Bloom Architect
350 S. Milliken Ave., Ste. G, Ontario, CA 91761-7850
(909) 390-7209 FAX: (909) 390-7509
ARCHITECTURE AND PLANNING

LICENSED ARCHITECT BRETT A. STONE NO. C17047 7/31/07 STATE OF CALIFORNIA

REGISTERED PROFESSIONAL ENGINEER GLENN C. GATTILO JR. No. 034516 EXP. 9-30-08 MECHANICAL STATE OF CALIFORNIA

CEDG
CALIFORNIA ENGINEERING DESIGN GROUP, INC.
2725 West Burbank Blvd.
BURBANK, CA. 91505
(818) 566–7755

PROJECT
CALVARY CHAPEL OF THE HIGH DESERT
14740 EUCALYPTUS
HESPERIA, CA
92345

PROJECT
FELLOWSHIP HALL

ISSUANCES

OWNERS MEETING	03–08–04
PLANNING REVIEW	06–01–06
PLANNING SUBMITTAL	01–31–07
FIRST PLAN CHECK	03–26–07

REVISIONS

WEISER IRON
MAR 30 2007
RECEIVED

TITLE
CONTROL WIRING DIAGRAM

SCALE

DATE 6–27–06

JOB NO. 260106

M–4.0