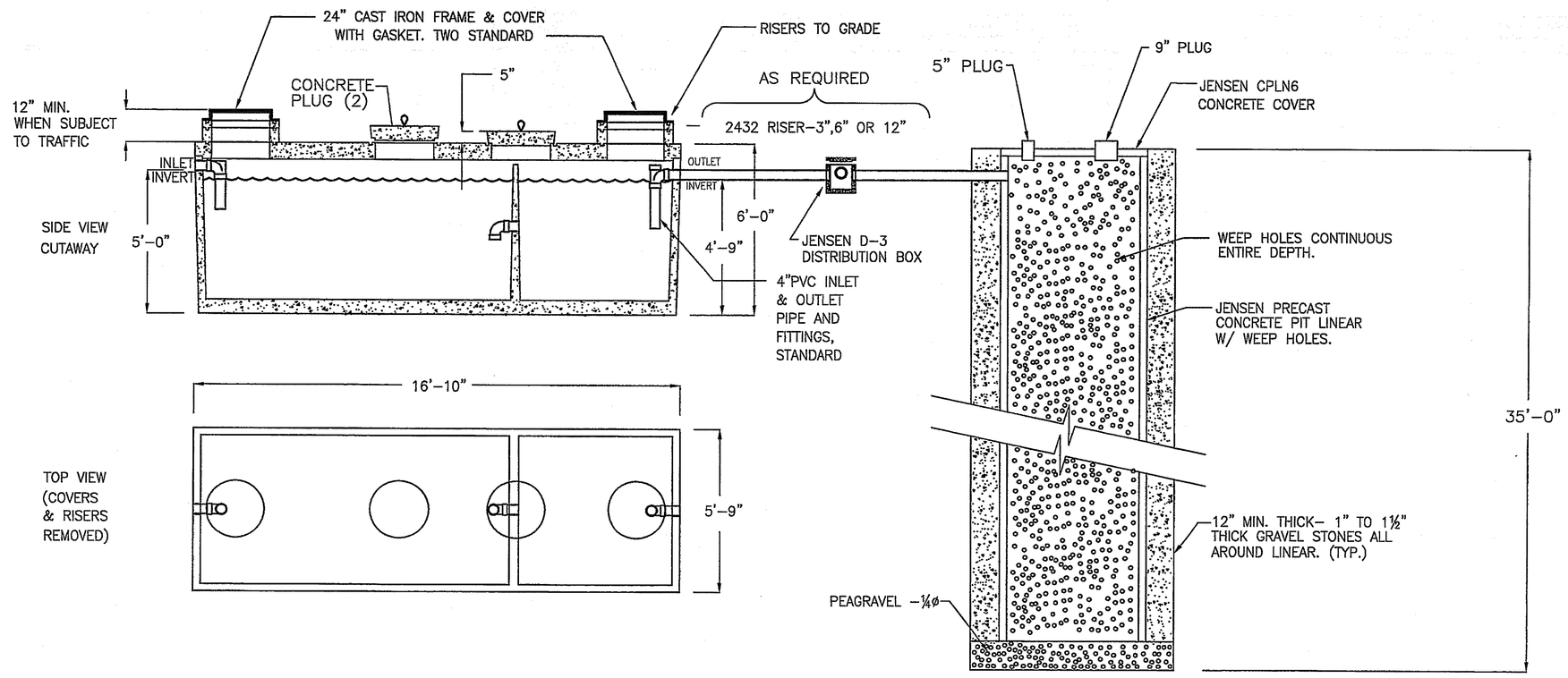

SEPTIC TANK DETAILS

SCALE: NONE | 1

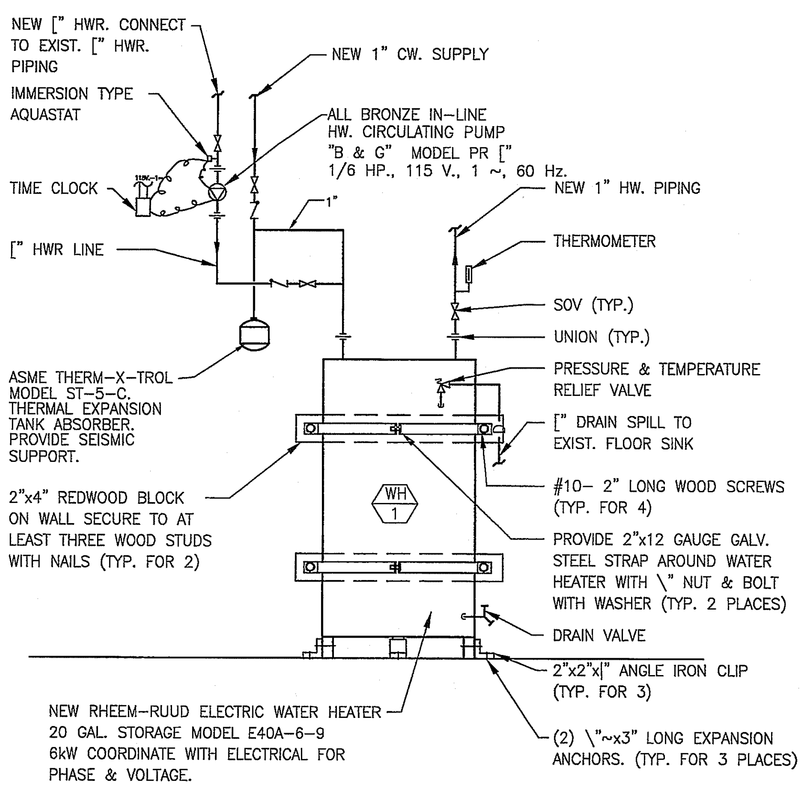

WATER HEATER DETAIL

SCALE: NONE | 2

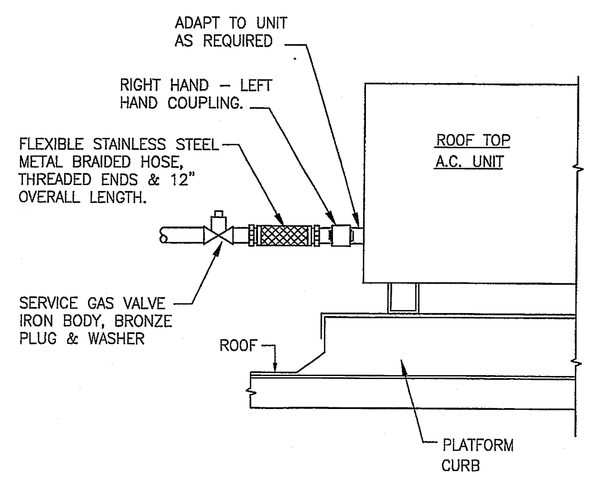

GAS SHUT-OFF DETAIL AT A/C UNIT

SCALE: NONE | 3

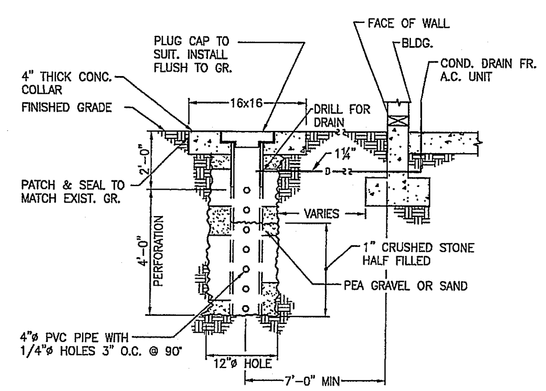

DRYWELL DETAIL

SCALE: NONE | 4

CEDG NO. 6478

TOVEY/ SHULTZ CONSTRUCTION INC.
18261 COLLIER AVE. SUITE "A"
LAKE ELSINORE, CA 92530
PHONE (909)471-5677
FAX (909)471-5547

DESIGN/BUILD

CONSULTANT

Brian R. Bloom Architect
350 S. Milliken Ave., Ste. G, Ontario, CA 91761-7850
(909) 390-7209 FAX: (909) 390-7509
ARCHITECTURE AND PLANNING

LICENSED ARCHITECT BRETT A. STONE NO. C17047 7/31/07 STATE OF CALIFORNIA

REGISTERED PROFESSIONAL ENGINEER CLIFFORD S. GATTI NO. 024315 EXP. 9-30-06 MECHANICAL STATE OF CALIFORNIA

CEDG
CALIFORNIA ENGINEERING DESIGN GROUP, INC.
2725 West Burbank Blvd.
BURBANK, CA. 91505
(818) 566-7755

PROJECT
CALVARY CHAPEL OF THE HIGH DESERT
14740 EUCALYPTUS
HESPERIA, CA
92345

PROJECT
FELLOWSHIP HALL

ISSUANCES

OWNERS MEETING	03-08-04
PLANNING REVIEW	06-01-06
PLANNING SUBMITTAL	01-31-07
FIRST PLAN CHECK	03-26-07

REVISIONS

WEISER IRON
MAR 30 2007
RECEIVED

TITLE
EQUIPMENT SCHEDULES

SCALE

DATE
6-27-06

JOB NO.
260106

P-3.1