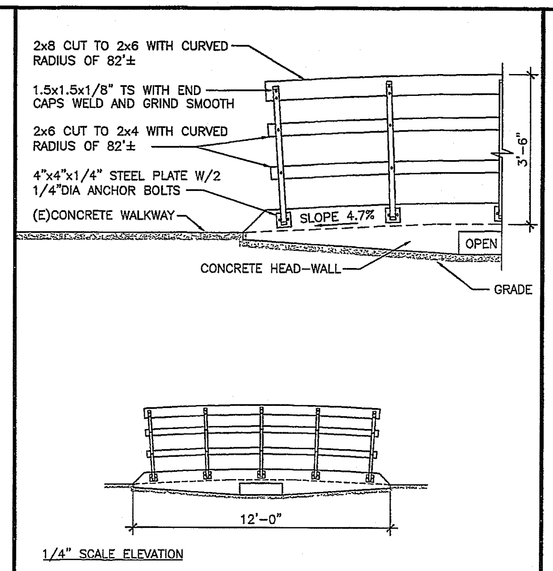

1/4" SCALE ELEVATION

ELEVATION 3/4"=1'-0" 8

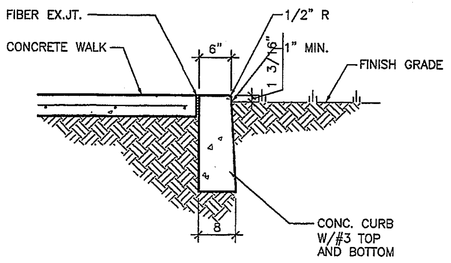

CURB DETAIL 3/4"=1'-0" 4

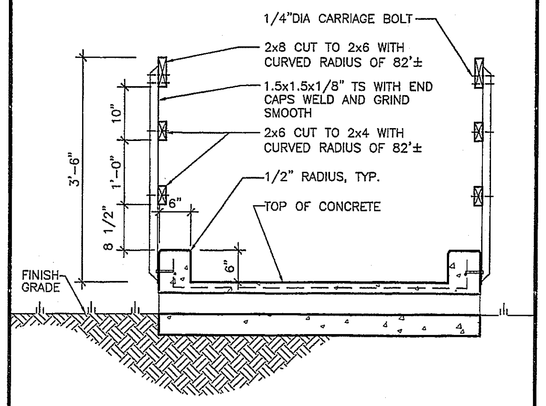

CROSS SECTION 3/4"=1'-0" 7

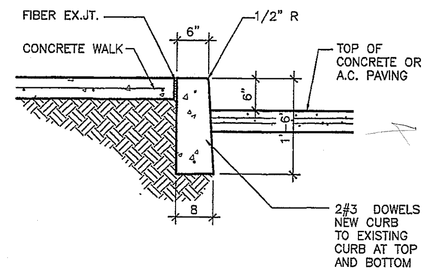

CURB DETAIL 3/4"=1'-0" 3

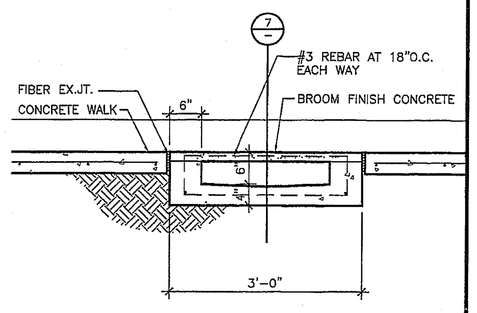

WALKWAY DRAIN 3/4"=1'-0" 6

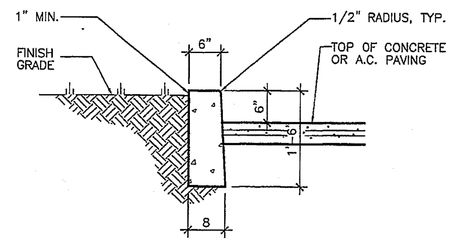

CURB DETAIL 3/4"=1'-0" 2

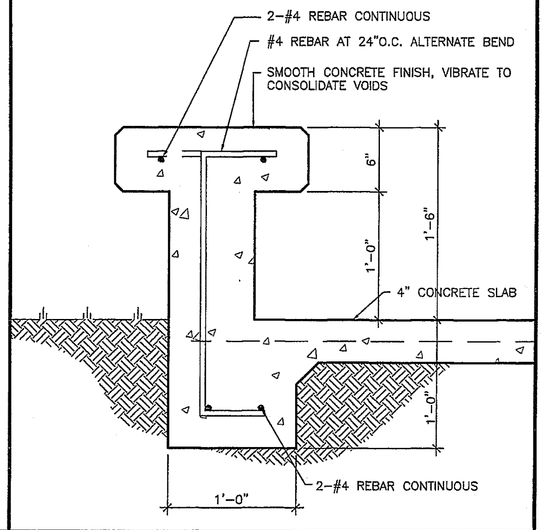

SEAT WALL 1 3/4"=1'-0" 9

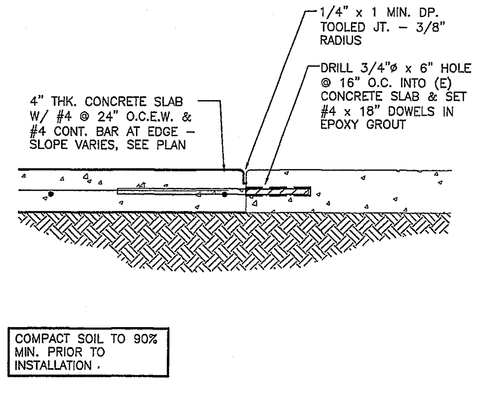

NEW TO EXISTING CONCRETE 1 1/2"=1'-0" 5

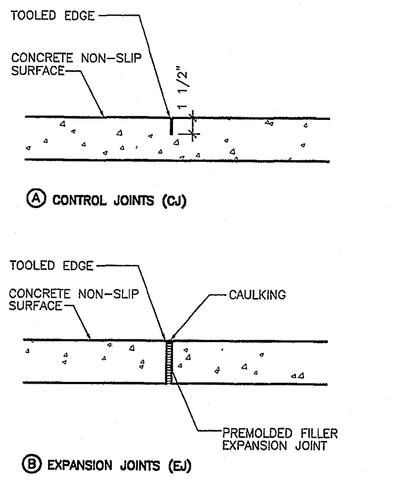

CONCRETE JOINTS 1 1/2"=1'-0" 1

TOVEY/ SHULTZ CONSTRUCTION INC.
18261 COLLIER AVE. SUITE "A"
LAKE ELSINORE, CA 92530
PHONE (909)471-5677
FAX (909)471-5547

DESIGN/BUILD

CONSULTANT

Brian R. Bloom
Architect
350 S. Milliken Ave., Ste. G, Ontario, CA 91761-7850
(909) 390-7209 FAX: (909) 390-7509
ARCHITECTURE AND PLANNING

LICENSED ARCHITECT BRETT A. STONE NO. C17047 7/31/07 EXP. DATE STATE OF CALIFORNIA

PROJECT
CALVARY CHAPEL
OF THE HIGH DESERT
14740 EUCALYPTUS
HESPERIA, CA
92345

PROJECT
FELLOWSHIP HALL

ISSUANCES
03-26-07 PLAN CHECK

REVISIONS

WEISER IRON
MAR 30 2007
RECEIVED

TITLE
SITE DETAILS

SCALE
AS NOTED

DATE
03-26-07

JOB NO.
260106

SD1.1